SHEET OF

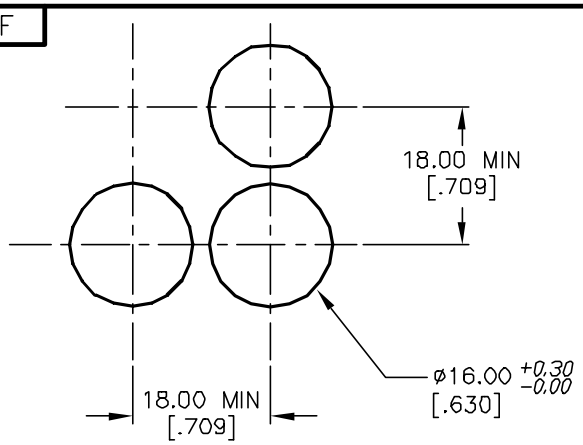

RECOMMENDED PANEL MOUNTING

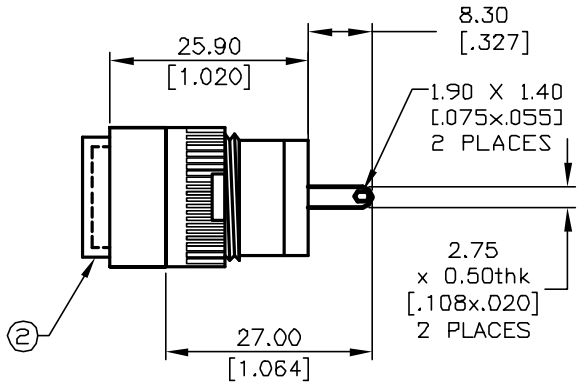

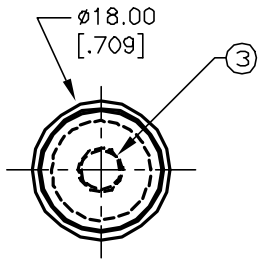

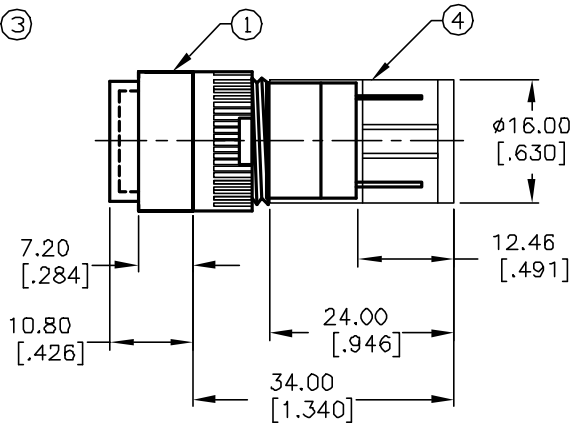

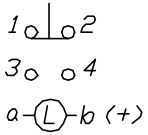

CONTACT CONFIGURATION

NOTES:

1. ALL DIMENSIONS IN MM [INCH]
2. GENERAL TOLERANCE: X.X=±0.4
   X.XX=±0.25
3. TERM. NOS. FOR REFERENCE ONLY.
4. RATING: 5A@250V AC / 8A@125V AC
5. MECHANICAL LIFETIME: >2 MILLION OPERATIONS
6. TRAVEL: 3.0MM
7. CONTACT MATERIAL: COPPER ALLOY W/SILVER PLATING

PARTS LIST			
ITEM	QTY.	PART NO.	PART DESCRIPTION
1	1	F040003	L16PLR10
2	1	F050112	50-001-12 (GREEN)
3	1	F050424	50-004-24 (YELLOW LED)
4	1	F051601	P16 PLASTIC TERMINAL PROTECTOR

REV.	ECN No.	DESCRIPTION	DATE	CHKD
C	12962	CORRECT PART # FOR ITEM 1	3/26/03	AR
B	12947	CORRECT PARTS LIST	3/24/03	AR
A	12917	RELEASED FOR PRODUCTION	3/17/03	AR

THE INFORMATION CONTAINED IN THIS DOCUMENT IS PROPRIETARY TO E-SWITCH AND IS NOT TO BE COPIED OR TRANSFERRED

E-SWITCH®

TITLE L16PLR10KYELGRN

SCALE	DATE	DR	DWG	REV
1.5:1	3/17/03	AR	XF0548P	C