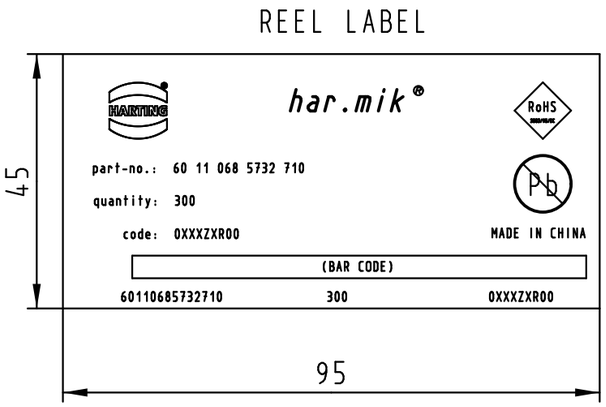

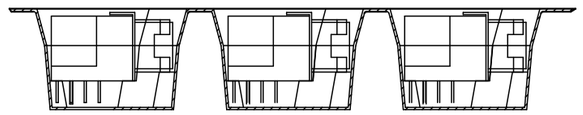

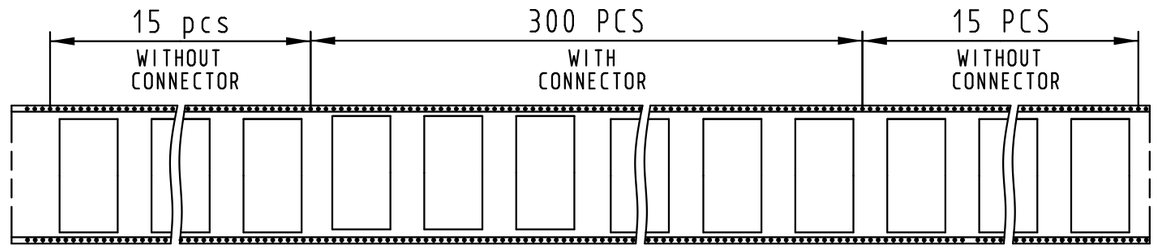

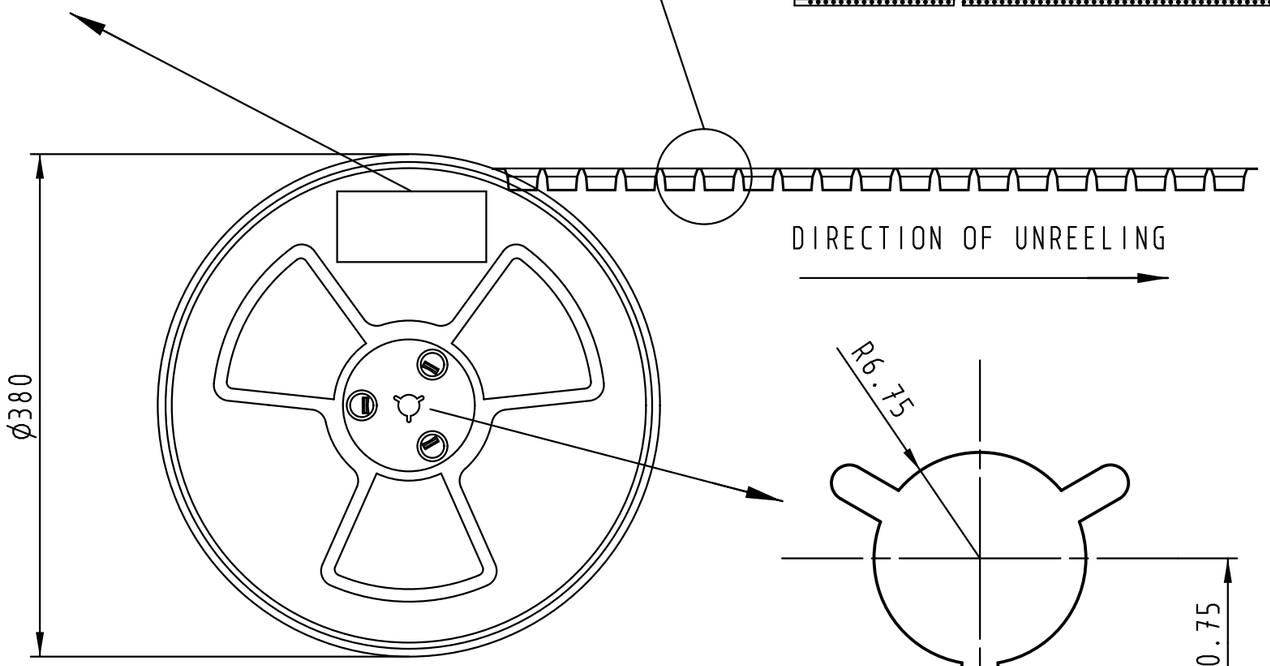

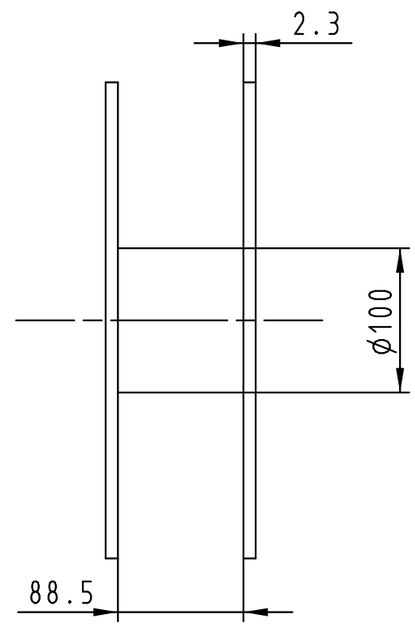

Packaging in accordance with EIA 481-2-A
tape & reel packaging for gripping process

1)see TB 60 11 068 5732 folio 1/2
for connector dimensions
and PCB layout

60 11 068 5732.710	in reel unit packaging 300 connectors
Part Number	Index designation

All Dimensions in mm
Original Size DIN A 3

Techn. Character.

Free size tolerances

	Dat.	Name
Detail.	29-OCT-09	J.Sheng
Insp.	18-Nov-09	S.W
Stand.	18-Nov-09	S.W

Scale 2 : 1

har.mik® I/O bellow
68P Har.mik female SMC
with angled solder pins,
thread hole M2.5, fixed latches

Mod.	Dat.	Name
EC01926	31-May-10	K.Luo
31770	29-OCT-09	J.Sheng

Zhuhai Harting Limited

TB 60 11 068 5732

Sub.

Page 2/2

All rights reserved